WHITEPAPER

Design of Detent System for Snow Blower

Hardik Patel
Sahil Patel

February 2015

L&T Technology Services

Table of Contents

Abstract

A Detent is a device used to mechanically resist or arrest the rotation of a wheel, axle or spindle. Such a device can be anything ranging from a simple metal pin to a machine; this concept is used in a snow blower as locking mechanism of a chute.

This white paper presents a detailed design and development approach of a manual Detent System specifically used in a consumer snow blower (or thrower) as locking mechanism of the discharge chute. This paper discusses the requirements of the new design, the various stages of design and development cycle and various tools used to support this program.

Keywords: Manual chute locking system, Detent System for snow blower (or thrower), Chute locking system for snow blower, Single Stage (SS) snow blower detent, outdoor power equipment.

1. Introduction

All major U.S. based snow equipment manufacturing industries are using a similar concept for the chute locking mechanism that uses spring steel strip. A major issue faced by the Original Equipment Manufacturers (OEMs) is change in environmental condition during storage and working of a snow blower. Due to this, deformation in main parts takes place and the system gets stuck. Another major issue for the OEMs is rejection of 70% of the components in production due to the tight tolerances required in parts for proper function, so OEMs are looking for a new system in which these issues can be minimized and better assembly and locking operation takes place.

The first phase of design and development cycle is concept development in which various concepts are suggested. The second phase is a preliminary design in which rough sizing, material selection and basic spring design are done. The last phase is the detail design phase in which all components are designed in detail. In this phase, material selection, design of spring for infinite life, design of plastic and sheet metal components are done. The final design is prototyped on which cycle tests and field tests are carried out. The new design passed the cycle test while field test results are still awaited.

The solution provided by L&T Technology Services is unique and has high potential to be adopted by major OEMs across globe. The newly designed Detent System is appreciated by customers and has left behind a nice foot print of the design capability of L&T Technology Services.

Chute rotation group is a very crucial sub-system of any snow blower product (See figure 1). The basic function of this group (See figure 2) is to guide snow and throw it in the desired direction. In this group, chute can rotate along the axis of the gear on chute plate. For manual snow blower, the chute is operated by hand using chute rotation handle. Detent is a very critical element of the chute rotation group. Its function is to lock the chute in a desired orientation when snow blower is working.

Snow blowers are operated in extreme cold environments. The operating temperature range varies from -20° F to 40° F. Detent System design takes into account the various requirements of a layout design in available space, strength, stiffness, lubrication, material selection of components which do not get affected in operating condition.

Figure 1: Snow Blower

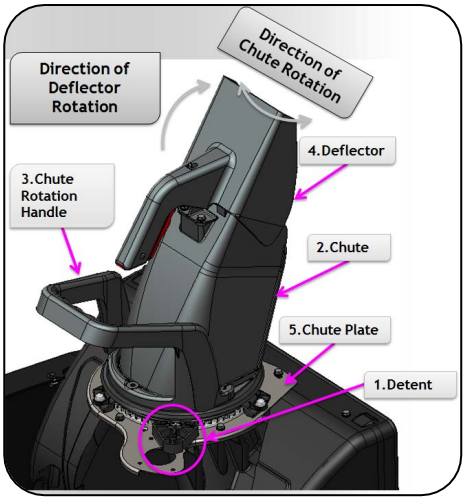

Figure 2: Chute Rotation Group

2. Requirement of New Detent Mechanism

Every Single Stage (SS) chute rotation snow blower uses a locking system for a chute to direct snow in desired orientation. All major snow blower manufacturers use the same or similar design of Detent System that uses metal strip made up of spring steel material (See figure 3).

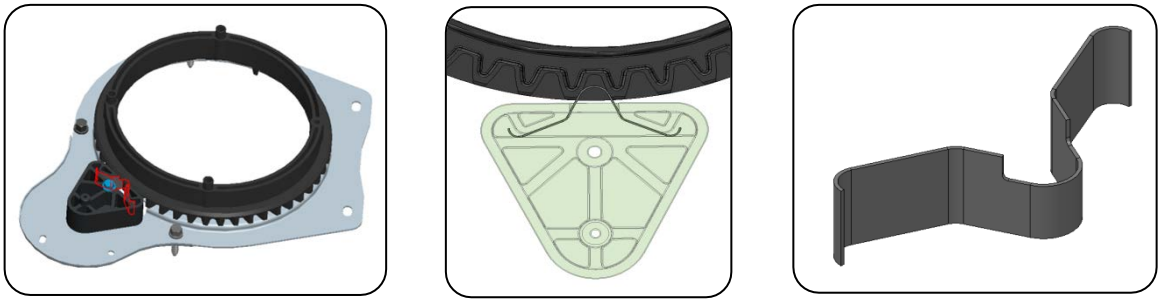

Figure 3: Existing Detent Mechanism

Major challenges in the existing system are as follows:

- The system gets stuck due to expansion and contraction of spring steel in operating range
- Tolerance mentioned on drawings are very tight due to functional requirements that lead to 70% rejection of manufactured parts
- Snow particles or water enters into the system due to the operating environment, resulting in the entire chute rotation system getting stuck

3. Overview of the New Detent Design and Development

The Detent System Design and Integration process encompass knowledge from many engineering disciplines such as strength of materials, engineering mechanics, machine design and material science. The geometry, mission requirements, operational requirements of the chute rotation system governs the Detent System configuration.

The configuration includes choice of load application, environmental condition, space availability, type of material and finish.

3.1 Concept Design

The concept design started with a study of all design specifications and standards provided. A new concept is then evolved which meets the functional and snow blower industry requirements. Major design drivers are load condition, operating environment, performance, safety, cost and space availability. The load and actuation mechanism are also worked out in this phase. Various trade-off studies are performed to optimize cost, volume, feasibility. After deriving various concepts (See figure 4), PUGH decision matrix is used to decide the best concept.

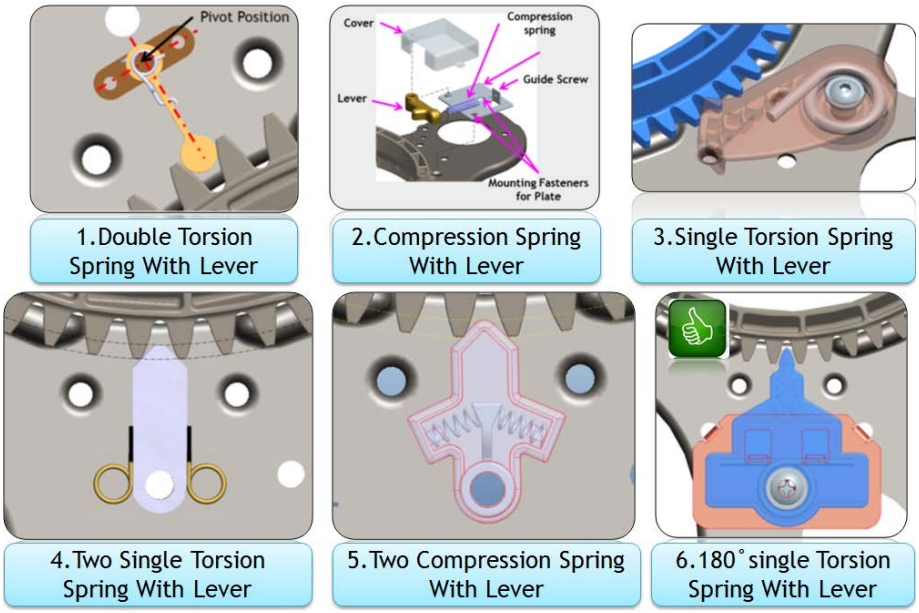

Figure 4: Various Concepts

3.2 Preliminary Design

In the preliminary design phase, sizing of components to fit in existing layout without much modification, basic spring design calculation, hinge design and material selection activities are carried out.

3.3 Detail Design

In this phase, the detailed design of all the Detent System components is performed. Component loads are estimated and material selection and sizing are done in this phase. Finalize geometry of Detent lever and base plate is done using CAD modeling and mechanism. Torsion spring design for infinite cycle is carried out using hand calculation and validated by the IST spring calculator. Standard parts are used wherever possible to minimize the cost of the system. In this phase, digital mock-up of the Detent system is developed which is essentially the virtual prototype of the Detent System (See figure 5). All lessons learned and best practices evolved over the years are utilized in the detail design to realize a reliable design. In this phase, ease of manufacturing and assembly line are considered and as a result the entire Detent System can be a bought out item for an OEM and can be assembled in one operation.

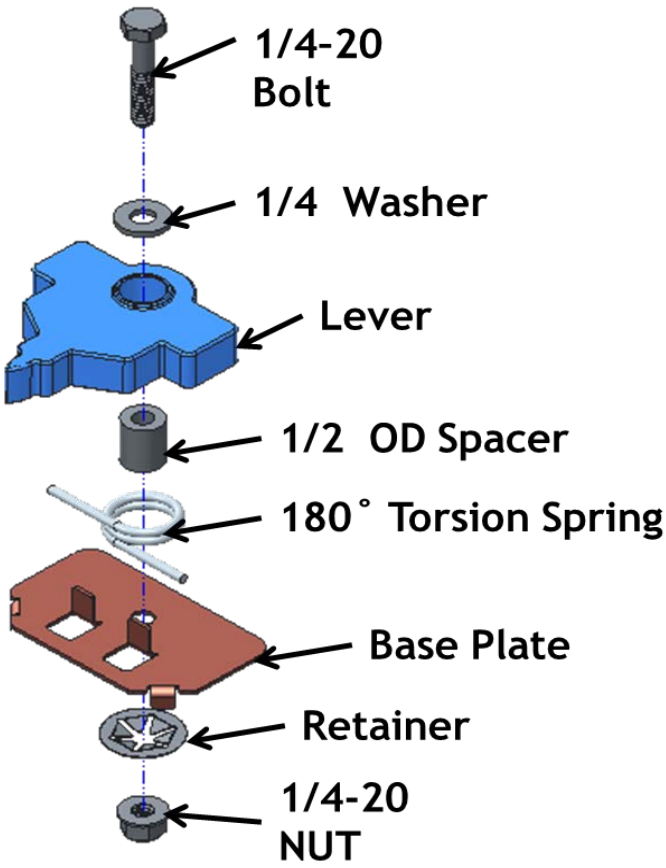

Figure 5: Detail Design

3.4 Stress and Fatigue Analysis

Stress analysis is done through the conventional hand calculation for a Detent lever and tabs on base plate (See figure 6). Detent system is designed as a safe life structure and fatigue analysis methods are used for prediction of spring life which eventually decides the life of Detent System. Safe life requirements demand as high as 1,000,000 cycles of spring (See figure 7).

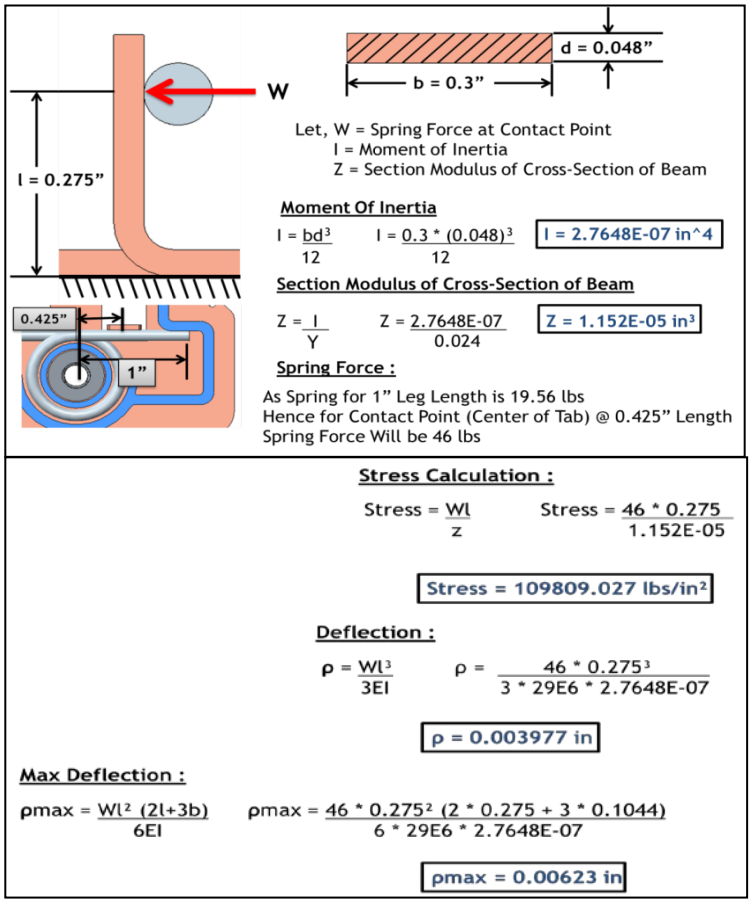

Figure 6: Stress Analysis

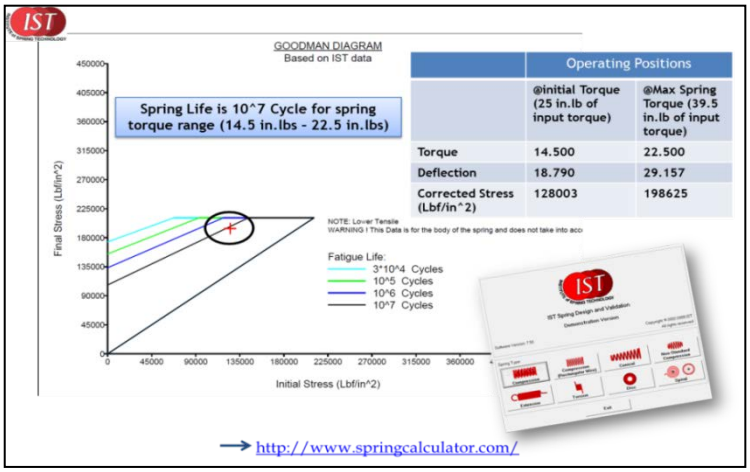

Figure 7: Spring Life Calculation

4. CAX Technologies Adopted

Many commercially available tools like CAD/CAE/Spring design calculator are used in the design and development of Detent System. These tools have helped in the virtual product development of the Detent System before an actual prototype is being fabricated. These tools have helped to improve designs with reduced cycle time and cost. Few of them include:

Table: CAX Tools

CAD Tool	Pro/Engineer
Kinematics	Pro/Mechanism
CAE	Pro-Mechanica
Spring Design	IST Spring Calculator

5. Prototype and Validation

A Prototype is built up at client's facility and tested for cycle test and field test. In cycle test, the prototype is tested for 9000 cycles without fail against the design value of 7200 cycles. Field test will start in the upcoming winter season.

6. Comparative Analysis

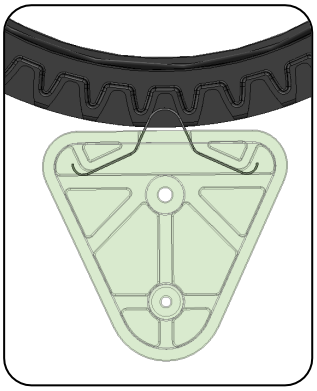

Figure 8: Existing Design

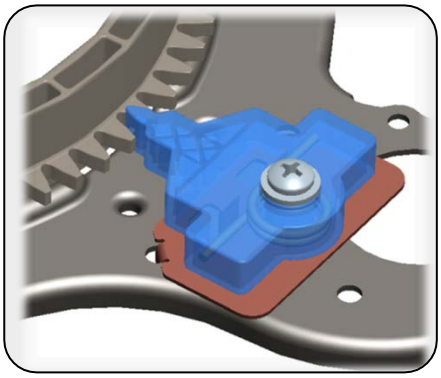

Figure 9: New Design

The following are the improvements achieved in the new design as compared to the existing design (see figure 8 and figure 9)

- **Rejection rate:** is very less in the new design compared to existing design as spring steel part is replaced by PBT (Polybutylene Terephthalate) and can be manufactured with tight tolerance
- **Robustness:** lesser reaction to environmental changes within an operational temperature range for PBT material makes the new design more robust compared to the existing design.
- **Self-locking:** a rare feature of self-locking in the new design is achieved as compared to the existing system as entire system is covered by Detent lever and no chance of snow or water to enter inside the system.

Above comparison proves that the new design has overcome all challenges of existing design and can replace existing design in future.

7. Conclusion

The New Detent System design for a single stage (SS) manual chute rotation for snow blower is an unconventional design that has a very high potential to replace the existing Detent System as it clearly overcomes major challenges present in the existing system. This is also a cost effective solution as rejection rate is minimum compared to existing design. This will lead to reduction in consumer complaints which will definitely improve customer satisfaction.

8. References

[i] Shigley, Joseph Edward. Shigley's mechanical engineering design. Tata McGraw-Hill Education, 2011

[ii] IST spring calculator(http://springcalculator.com/)

[iii] Spring Design Manual, Second Edition, Society of Automotive Engineers, Warrendale, 1996

[iv] Zytel® 101L BKB080, Nylon Resin Product Data Sheet, Nov 2013

About L&T Technology Services

L&T Technology Services is a wholly-owned subsidiary of Larsen & Toubro with a focus on the Engineering Services space, partnering with a large number of Fortune 500 companies globally. We offer design and development solutions throughout the entire product development chain across various industries such as Industrial Products, Medical Devices, Automotive, Aerospace, Railways, Off-Highway & Polymer, Commercial Vehicles, Telecom & Hi-Tech, and the Process Industry. The company also offers solutions in the areas of Mechanical Engineering Services, Embedded Systems & Engineering Application Software, Product Lifecycle Management, Engineering Analytics, Power Electronics, and M2M and the Internet-of-Things (IoT).

With a multi-disciplinary and multi-domain presence, we challenge ourselves every day to help clients achieve a sustainable competitive advantage through value-creating products, processes and services. Headquartered in India, with over 10,000 highly skilled professionals, 11 global delivery centers and operations in 35 locations around the world, we constantly find flexible ways of working, tailored to our assignments and customer needs.

For more information, visit us at www.lnttechservices.com